COOLENS®

# DTCM230-110-AL

## C-mount Bi-telecentric Lens

- Optimized for 1/2.5"~1.1" C-Mount cameras;
- Largest FOV from 26mm upto 300mm;
- Excellent resolution for high pixel cameras;
- Low distortion, good telecentricity, big aperture and big depth of field for high end application.

| Optical Specifications | |
|---|---|
| Magnification (x) | 0.104 |
| Object Field of View (Φmm) | 110 |
| Working Distance (mm) | 263±4 |
| Max Sensor Size (Φmm) | 11.4(2/3") |
| Best Aperture (F/#) | 4.9 |
| Telecentricity typical (max) (deg) | <0.1 |
| Distortion typical (max) (%) | <0.1 |
| MTF30 (lp/mm) | >190 |
| Depth of Field (mm) | ±40.7@F11 |
| Length of I/O (mm) | 550±4 |

| Field of View (mm × mm) | |
|---|---|
| 1/1.8" EV76C570 (7.2x5.4) | 69.2x51.9 |
| 1/1.7" IMX226 (7.5x5.6) | 72.1x53.8 |
| 2/3" IMX250/264 (8.45x7.1) | 81.3x68.3 |
| **Mechanical Specifications** | |
| Mount | C |
| Length (mm) | 269.6 |
| Weight (kg) | 2.7 |
| **Compatible Lighting** | |
| Telecentric LED Lighting | DTCL-110-xW-y |
| | Beam Diameter 110mm |

Notes:
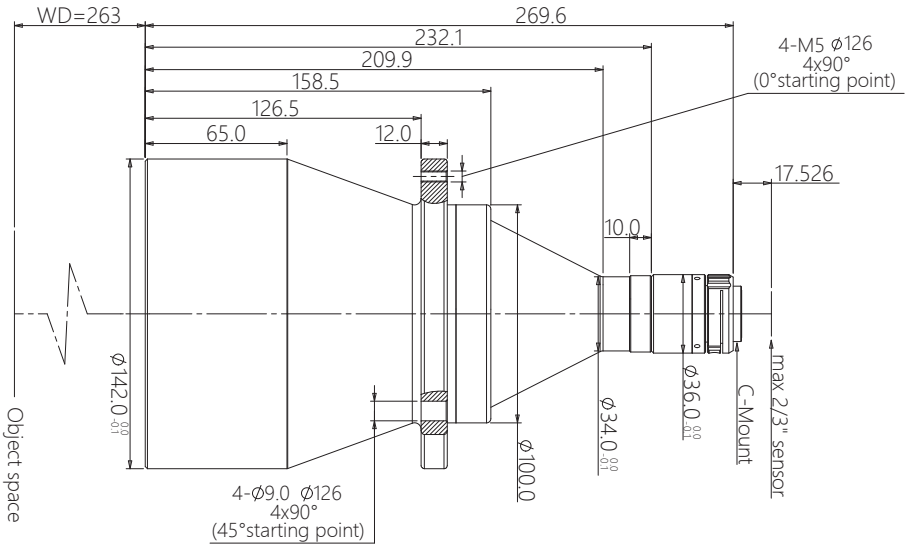
1. Depth of Field is calculated value, this value could be used for imaging test, but to get sharp image in application, half of calculated value is suggested.
2. Length of I/O = WD + Length + Back Focal Length.