COOLENS®

WWK04-110C-230

Large FOV Objective Telecentric Lens

- Object side telecentric lens, support 5Mp-20Mp area scan camera.
- High definition, low distortion, good telecentricity, especially suitable for high-precision AOI and positioning applications.
- Built-in coaxial lighting, especially suitable for inspection of wafers, glass devices.
- Quickly customization apply to different camera specifications, as well as magnification, working distance, DOF requirements.

Optical Specifications	
Magnification (x)	0.4
Working Distance (mm)	110±2
Max Sensor Size (Φmm)	11.0(2/3")
Best Aperture (F/#)	7
Telecentricity typical (max) (deg)	<0.03
Distortion typical (max) (%)	<0.02
MTF30 (lp/mm)	>140
NA	0.02852
Resolution (μm)	11.8
Depth of Field (mm)	±1.8@F7
Length of I/O (mm)	268±2

Field of View (mm × mm)	
1/1.8" EV76C570 (7.2x5.4)	18.0x13.5
1/1.7" IMX226 (7.5x5.6)	18.8x14.0
2/3" IMX250/264 (8.45x7.1)	21.1x17.8
Mechanical Specifications	
Mount	C
Length (mm)	140.2
Weight (kg)	-
Coaxial Light	Yes
Iris	No
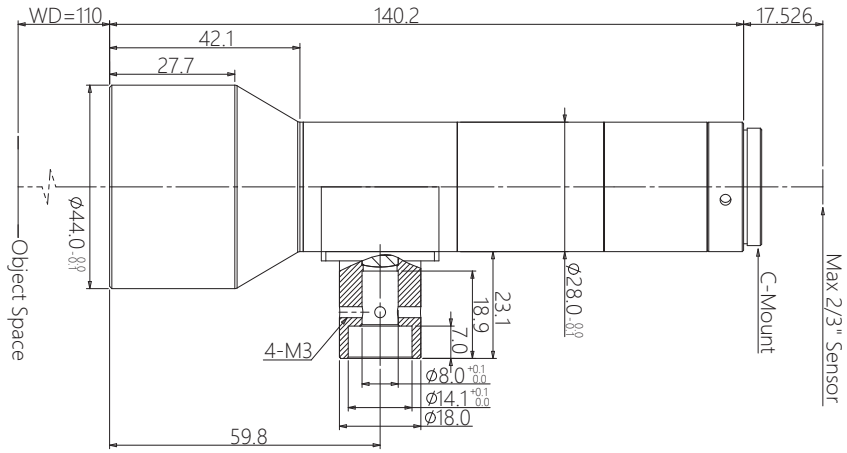
Notes:
1. Depth of Field is calculated value, this value could be used for imaging test, but to get sharp image in application, half of calculated value is suggested.
2. Length of I/O = WD + Length + Back Focal Length.